mahlo
trendsetting technology. worldwide.
since 1945

ORTHOPAC® REMC-15

Process Control System | Edition Stenterkit

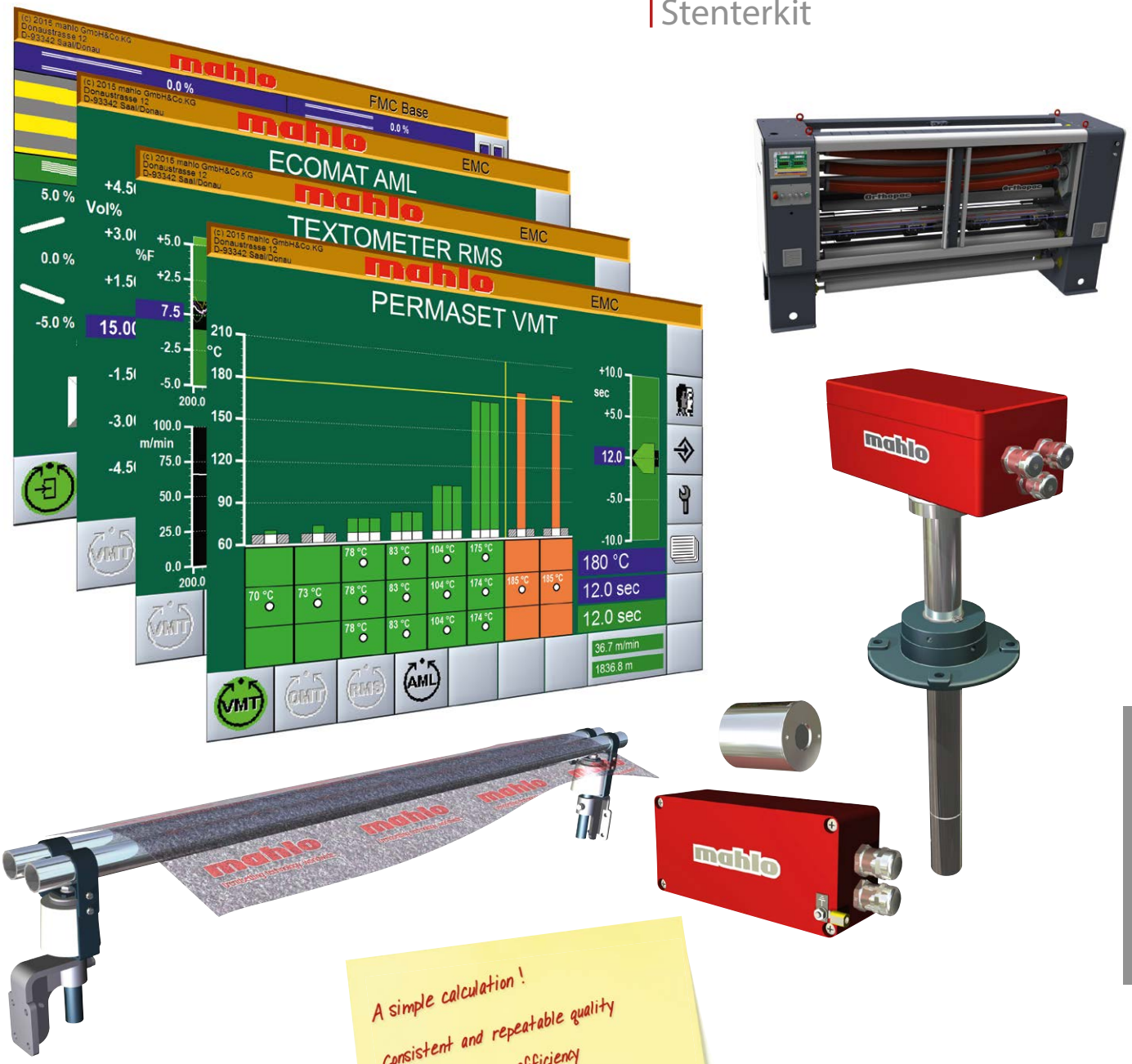

A simple calculation!
consistent and repeatable quality
+ Optimum energy efficiency
+ Optimizing production processes
= REDUCE YOUR COSTS!

Quality made in Germany

TEXTILE NONWOVEN COATING & CONVERTING PAPER EXTRUSION

ORTHOPAC® REMC-15

TEXTILE NONWOVEN COATING & CONVERTING PAPER EXTRUSION

ORTHOPAC® REMC-15 | Edition Stenterkit

Edition Stenterkit – Quality does not have to be expensive!

Problem

A cost-efficient and quality-oriented textile machine is primarily an operative matter. However, it is often critical for the market involvement. Using suitable measuring and control systems with drying and fixing processes is therefore absolutely essential. The main problems with processes in stenters include:

- Wrong dwell times of the product in the stenter
- Excessive energy consumption with the exhaust air moisture
- Poor residual moisture values of the product
- Product skew during drying process.

Much unused energy is wasted through these problems. In addition, the process continuity and quality of the goods suffer.

Solution

Maximum economy of production and high, continuous product quality can be achieved only through optimal control and regulation of the processes in the stenter. The stenter can only work efficiently and economically by addressing the four basic problems just enumerated. With life-cycles of up to 30 years, energy savings through economy plays a decisive role. Translated to the service life of a stenter, the energy costs amount to roughly 10 million Euro. If up to 30 % of this sum can be saved, the investment for the necessary control equipment is only a secondary matter.

Edition Stenterkit – simple, effective, affordable

We have learned through intensive analysis of the market, spanning several years, that up to 80 % of the textile outfitters have the same basic problems. Based on this awareness we have created a product that offers a solution exactly for this issue. "Meet the needs" was the motto with the "Edition Stenterkit". Process control for drying and fixing processes.

Because of the well-chosen and exactly defined functions, in addition to series production, Edition Stenterkit can be produced in a cost-optimized manner. We pass this cost benefit on to you – 100 %. Thus your investment quickly turns into profit.

Components

Edition Stenterkit includes everything required to solve the process problems outlined here.

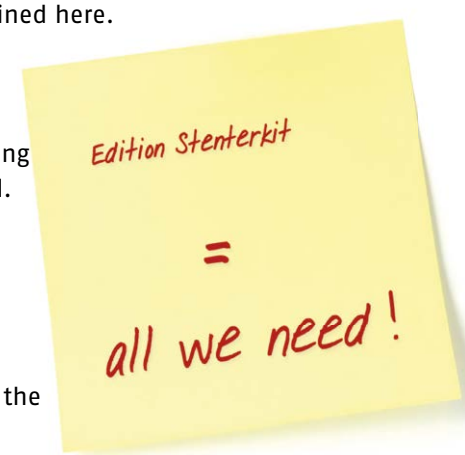

- **Automatic process control:**
  Applying state-of-the-art microprocessor technology, process control ensures product quality and energy balance. The basic unit is integrated in the straightening system. Depending on the equipment package different components are supplied.
- **Orthopac REMC Automatic straightening system:**
  An optical scanning system with electronic control for skew correction in connection with a precise straightening unit. Removes skews and bows fully automatically. The unit is controlled via a TFT touchscreen monitor
- **Ecomat AML (A) Exhaust air moisture measurement:**
  A dual zirconium oxide cell measures the humidity of the exhaust air, regulates the exhaust air volume and helps to minimize energy consumption.
- **Textometer RMS (R) Residual moisture measurement:**
  A rod electrode at the dryer delivery determines the residual moisture through electrical resistance measurement and controls the level of drying of the product via the dryer speed.
- **Permaset VMT (V) Dwell-time / Fixing time measurement:**
  Infrared pyrometers determine the temperature curve and the software determines the current dwell / fixing time. The dryer speed is automatically optimised.

Designs

The systems for woven or knitted fabric differ in the design of the straightening unit.

Design	Product width	Scanning	Accessories
Woven fabric	3200	6 Scanner heads	Base frame
Woven fabric	1800 / 2000	4 Scanner heads	Base frame
Knittted fabric	2400 / 2600	4 Scanner heads	Product tension control Spreading unit Base frame with 1 roller and tachometer

Equipment packages

Three equipment packages with different process control functions are available

Package			
Process control	AR	AV	ARV
Exhaust air moisture	X	X	X
Dwell time		X	X
Residual moisture	X		X

PROCESS CONTROL SYSTEM

ORTHOPAC® REMC-15 | Edition Stenterkit

The best of two worlds!

Product-highlights

- ✓ A single system controls all essential drying / process parameters
- ✓ Intuitive user interface
- ✓ Easy to install

Customer benefits

- ✓ Guaranteed product quality
- ✓ Optimizing the energy balance at drying and fixing processes

Process Control System

The basic unit of the process control is accommodated by the straightening system.

The sensors are simply connected to the system base via a single CAN-bus cable.

Product-highlights

- ✓ Highest alignment accuracy
- ✓ Progressive straightening speed
- ✓ Very compact construction
- ✓ Low goods content

Straightening system

A classic straightening unit in proven mahlo® quality provides absolutely straight-threaded products through state-of-the-art technology.

Customer benefits

- ✓ Maintaining tight distortion tolerances
- ✓ Avoiding complaints
- ✓ Improved customer relation-ship
- ✓ High repeatability
- ✓ Short amortisation times
- ✓ High reliability / Service life

Ecomat AML (A) exhaust air moisture

A

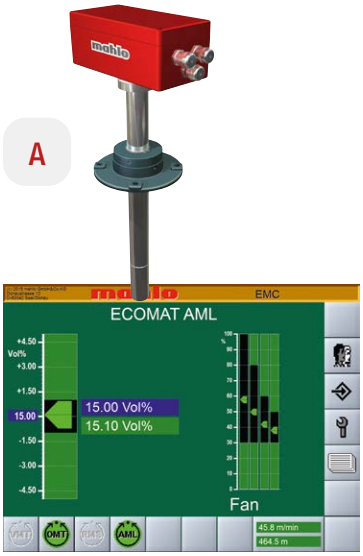

The amount of water to be evaporated during any period of time depends on the product weight, incoming and residual moisture, product width and transport speed.

Best possible control of the exhaust air flaps and fan speed produce optimal exhaust air moisture values. Much energy is saved through the adjusted heat output.

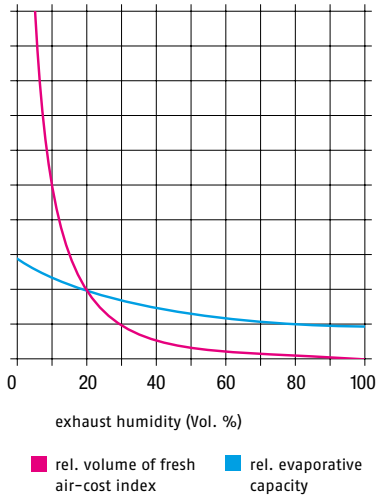

Textometer RMS (R) Residual moisture

R

In the area of residual moisture, the conductivity of the textile substrates' water content depends most strongly on the electrically measurable properties.
The residual moisture can be determined directly by measuring the electrical conductivity.

Heating energy is saved and the product quality as well as the drier capacity are increased by preventing overdrying of the goods.

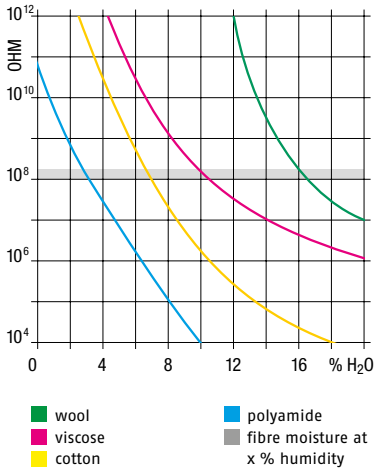

Permaset VMT (V) Dwell-time / Fixing time:

V

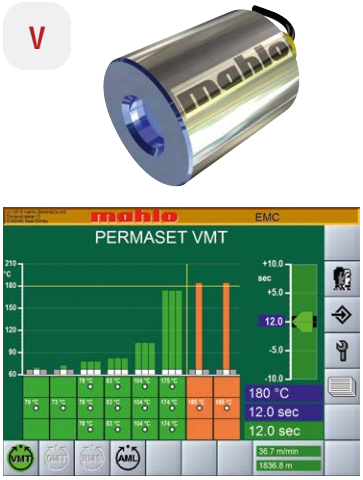

When wet product enters the dryer, it first heats up to the cooling limit temperature.
At a certain temperature threshold – called the fixing temperature – the temperature necessary for processing, fixing or condensing is reached.

Infrared pyrometers determine the temperature curve and the software determines the current dwell / fixing time. The dryer speed is automatically optimised.

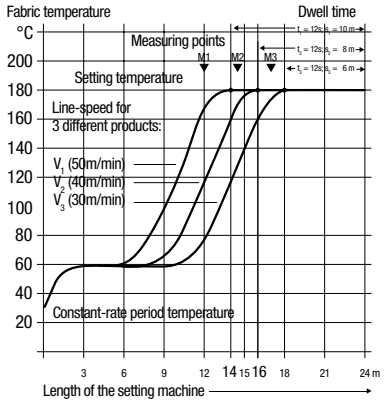

ORTHOPAC REMC

TECHNICAL DATA | WOVEN FABRIC • KNITTED FABRIC

TEXTILE NONWOVEN COATING & CONVERTING PAPER EXTRUSION

Orthopac REMC Straigthening unit	Woven fabric	Knitted fabric
Straightening mechanics	3 skew rollers, 2 bow rollers	
Drive	Electrical: Selction via servo-motors through frequency converters	
Straightening capacity (at w = 1800 mm)	Skew max. ± 750 mm; Bow max. ± 220 mm	
Positioning time	Bow / skew adjustable, minimum of 6 – 8 seconds at maximum displacement	
Product width	1800 / 2000 / 3200 mm	2400 / 2600 mm
Max. product speed	250 m/min	150 m/min
Fabric capacity (basic machine with scanner assembly)	3 skew / 2 bow rollers: ~ 3250 mm	
Scanning head bridge	4 (6) scan heads, manual adjustment via high-quality linear slides with latch positions	
Weight (when w = 1800 mm)	~ 950 kg	
Mains connection	3 x 400 VAC 50/60 Hz, no neutral, transformer station available for other voltages	
Max. power consumption	2.2 kVA	3.0 kVA
Max. ambient temperature	50 °C (air condition is standard)	
Display and operating station	12.1" TFT Touchscreen mounted in side section	

Dimensions

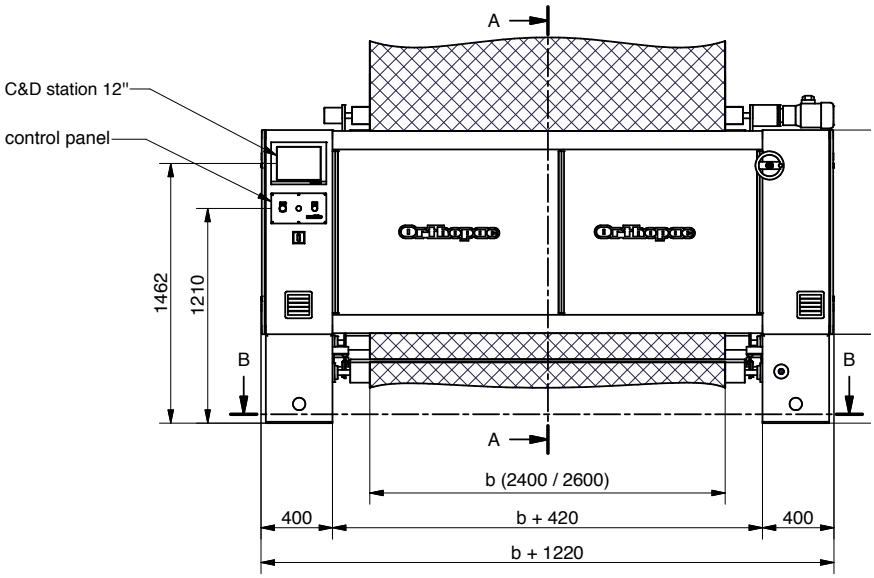

ORTHOPAC REMC
Knitted fabric
91-018701

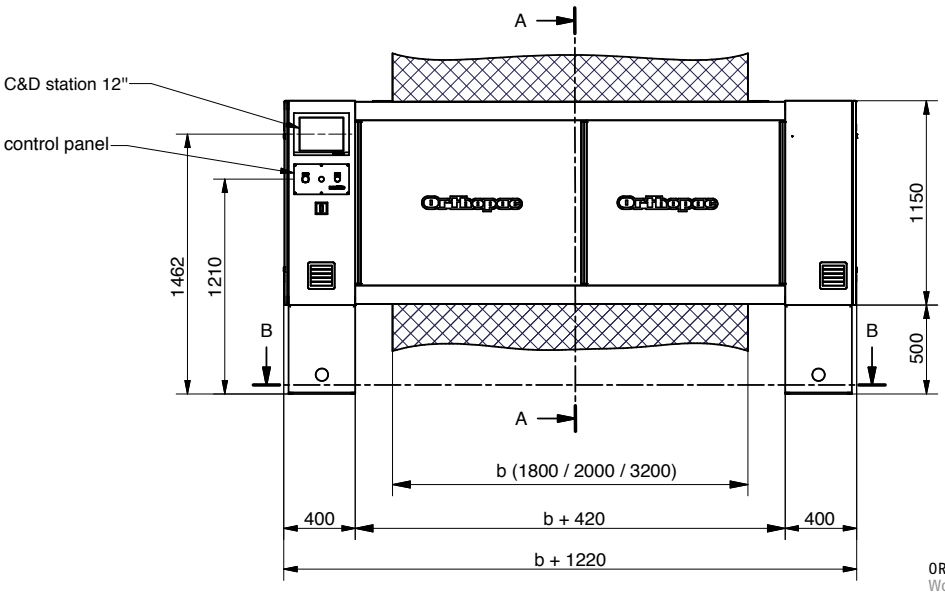

ORTHOPAC REMC
Woven fabric
91-018700

TECHNICAL DATA | ECOMAT AML • TEXTOMETER RMS

TEXTILE NONWOVEN COATING & CONVERTING PAPER EXTRUSION

Sensor	Ecomat AML A exhaust humidity
Measuring range	H_2O 0 – 100 vol.-%
Measuring accuracy	≤ 2 vol.-% of the top-end of range
Output signal	0 – 20 mA, 4 – 20 mA
Temperature range	Measuring amplifier: 0 – +65 °C Sensor: 0 – +300 °C
Climate class	JWE according to DIN 40040

Mechanical Data	Sensor	Measuring amplifier
Design	Stainless steel housing	Aluminium die-cast housing
Protection class	Only measuring gas allowed	IP 67

Sensor	Textometer RMS R residual moisture
Measuring principle	Residual moisture measurement
Measuring range	Depending on type of fibre, mixture and electrode e.g. cotton: 3 - 20 %
Controller output	Digital
Measurement display	Standard electrode (1-channel): highest moisture value
Operating limits	Sensor controller: 0...+ 50 °C

Dimensions

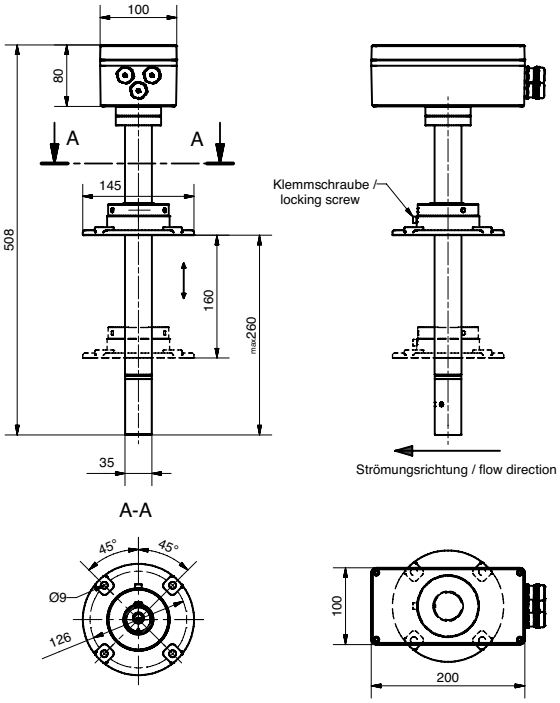

ECOMAT AML
91-015470-01

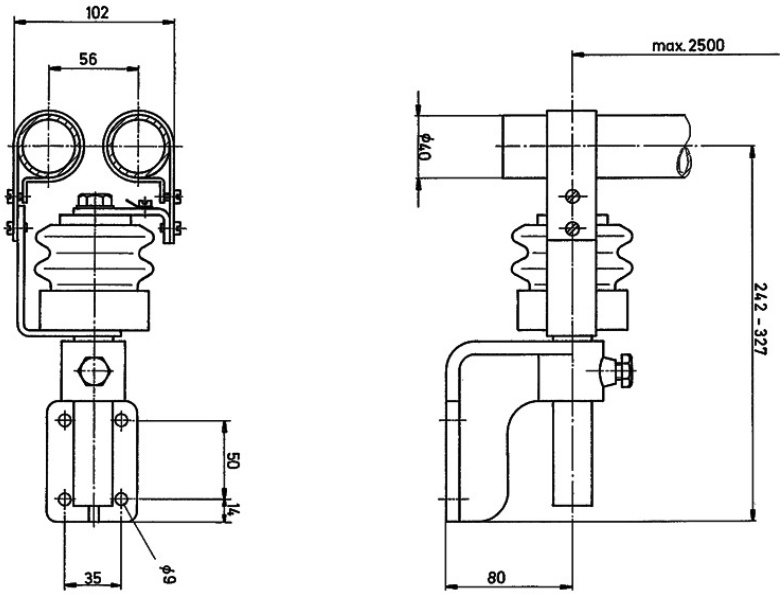

TEXTOMETER RMS
91-015683

TECHNICAL DATA | PERMASET VMT

TEXTILE NONWOVEN COATING & CONVERTING PAPER EXTRUSION

Sensor	Permaset VMT V Dwell-time / Fixing time
Measuring range	0 – 250 °C
Measuring field	Field of view 120°
Measuring accuracy	≤ 1 % of readout range at 23 °C
Response time	$t_{0,9}$ = 6 s
Output signal	CAN, analogue 0 – 20 mA
Temperature range	Measuring amplifier: 0 – +85 °C Sensor with cable: 0 – +250 °C
Climate class	KPA according to DIN 40040

Mechanical Data	Sensor	Measuring amplifier
Design	Stainless steel housing, 6 m connecting cable in Teflon design	Aluminium die-cast housing
IP protection class	IP 65	IP 67

LISTENING
Our sales team knows how to listen: with our customers' individual requirements, wishes and ideas firmly in mind, they point our R&D engineers in the right direction. So you get exactly what you really need.

Dimensions

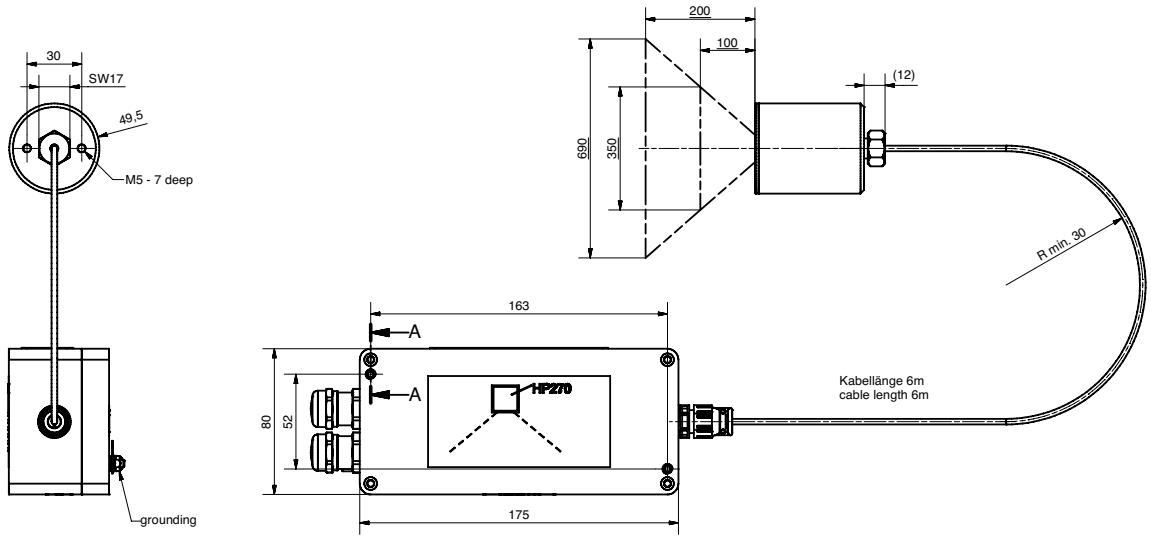

PERMASET VMT
91-015449

mahlo
trendsetting technology. worldwide.
since 1945

Monitoring and control systems, automation:

MAHLO® GUARANTEES QUALITY. WORLDWIDE, IN YOUR VICINITY.

Best-possible technical support and know-how transfer are written in capital letters at Mahlo. Thanks to an international network of agencies and service centres, customers have at their disposal competent support worldwide. We are there for you 365 days a year, 24 hours a day. Just get in touch with us!

- ✓ Over 40 service centres worldwide
- ✓ Service partners in over 100 countries
- ✓ Direct service and spare parts delivery within 24 hours
- ✓ Remote diagnostic system
- ✓ Service Hotline: +49-180-5062456

Mahlo GmbH + Co. KG Germany
Donaustr. 12, 93342 Saal/Donau
Telephone: +49-9441-601-0
Fax: +49-9441-601-102
Email: info@mahlo.com

Mahlo Italia S.R.L. Italy
Via Fiume 62, 21020 Daverio
Telephone: +39-0332-94-95-58
Fax: +39-0332-94-85-86
Email: mahlo.italia@mahlo.com

Mahlo America Inc. USA
P.O. Box 2825, Spartanburg, S.C. 29304
Telephone: +1-864-576-62-88
Fax: +1-864-576-00-09
Email: mahlo.america@mahlo.com

Mahlo Ouest S.R.L. Belgium
Quartum Center
Hütte 79 - Bte 10
4700 Eupen
Telephone: +32-87-59-69-00
Fax: +32-87-59-69-09
Email: mahlo.ouest@mahlo.com

Mahlo España S.L. Spain
Calle Luxemburgo nº 4
08303 Mataro (Barcelona)
Telephone: +34-938-640-549
Email: mahlo.espana@mahlo.com

WWW.MAHLO.COM

Quality made in Germany

ORTHOPAC® REMC-15 84-010475-003-en
05/2019 Subject to revision!