mahlo
trendsetting technology. worldwide.
since 1945

ORTHOPAC® RVMC–15

Modular straightening and process control system

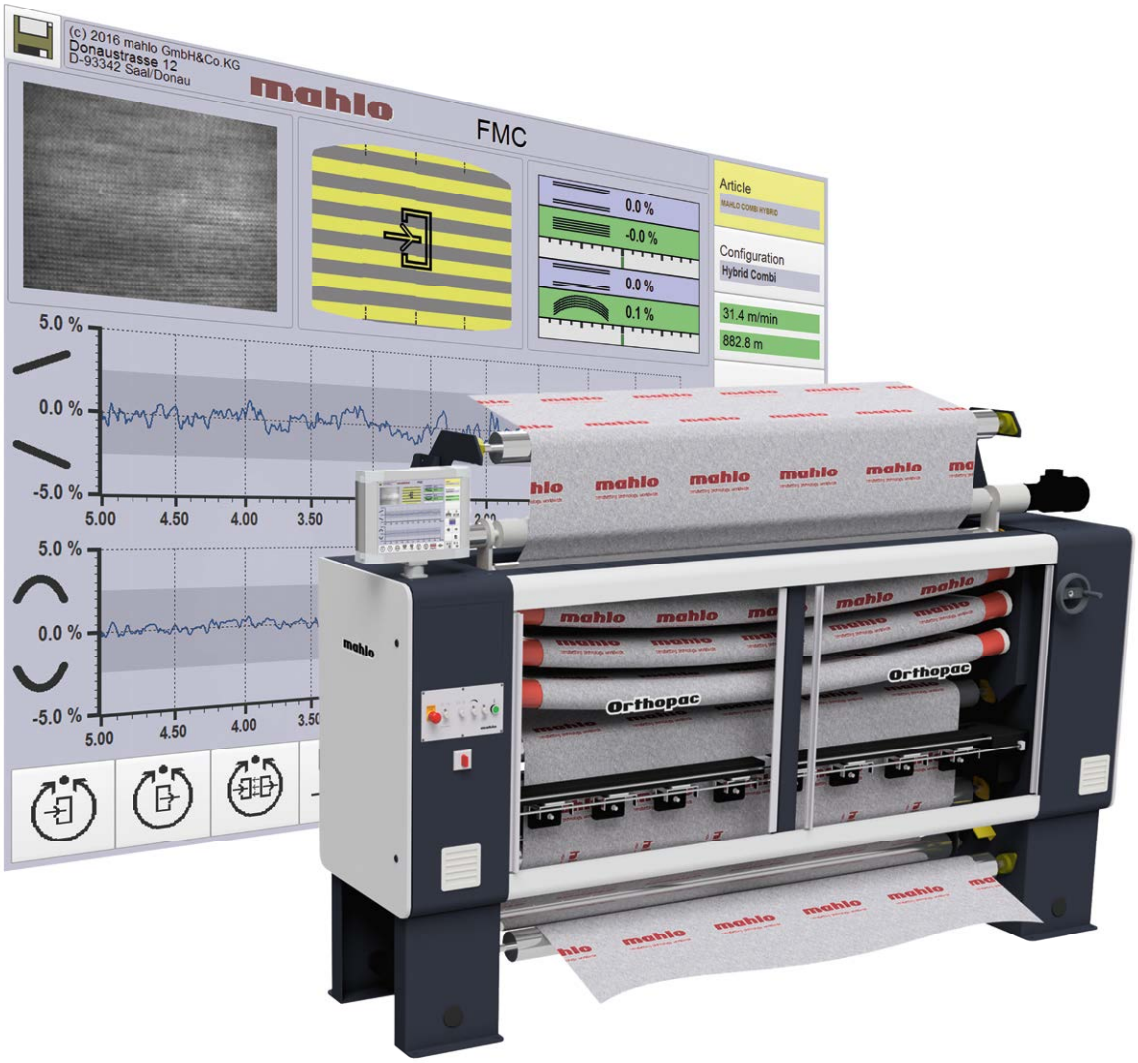

ORTHOPAC® RVMC–15

Quality made in Germany

TEXTILE NONWOVEN COATING & CONVERTING PAPER EXTRUSION

TEXTIL NONWOVEN COATING & CONVERTING PAPER EXTRUSION

ORTHOPAC® RVMC-15

A modular designed system for fully automatic skew correction and process control

Area of application

Textile manufacturers and textile outfitters are fighting with increasing production and energy costs, declining profit margins, shorter production times as well as greater requirements on quality and flexibility. Cost-efficient and quality-focused textile outfitting thus becomes increasingly important. Sustained production and the trend to higher-quality, technically sophisticated textiles also play a major role.

Regardless of the challenges of the textile industry – Mahlo has the right solutions ready. The broad range of applications for the textile industry by Mahlo is based on experience reaching back to the year 1945.

Orthopac is a modular straightening and process control system available throughout the entire process of textile outfitting. It combines the functionality of a weft straightener with that of a process control system in one compact device. It automatically ensures a straight-thread product before and after the drying or fixing process and optimises the processes all around the stenter. This increases quality and saves resources and energy. The modular design of the system allows its flexible adaptation to all applications. Both, standard requirements and highly customized demands are thus met.

Product highlights

- ✓ Modular system architecture
- ✓ Easy to retrofit
- ✓ Operator-friendly
- ✓ Informative process visualization:

Benefits for the customer

- ✓ Online monitoring and regulation of all relevant parameters
- ✓ Increased productivity
- ✓ High production reliability
- ✓ Optimised process repeatability
- ✓ Documentation of quality
- ✓ Providing a comparative basis for the quality standard
- ✓ Considerable energy savings
- ✓ Short amortisation times

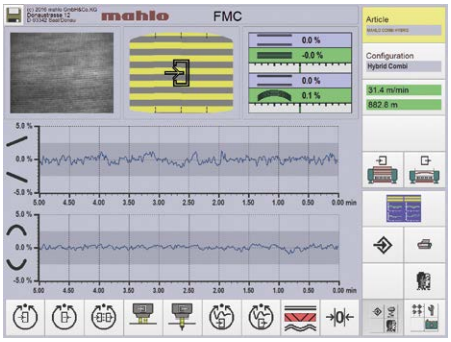

User interface of Orthopac RVMC / straightening system

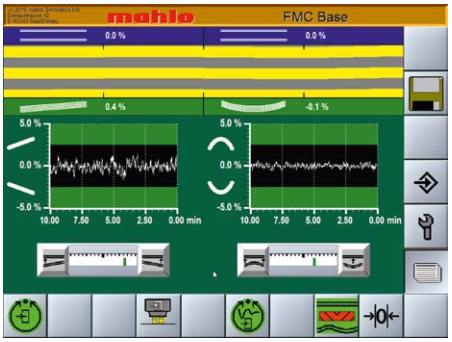

User interface of Orthopac RVMC Base

Better quality of goods, straight-thread product and saving resources in a single step: thanks to the **straightening and process control system Orthopac®** from Mahlo®.

Principle of operation

The weft straightener Orthopac with integrated web distortion detection forms the basis of the modular design. Additional intelligent sensors can be connected to the control system via a bus connection.

The following process parameters can be measured, visualized, controlled and documented by means of special software packages (Print Server).

- Weft thread or course skew / skew and bow rollers of the straightener Orthopac RVMC
- High moisture / squeezing pressure
- Thread or course density / over-feed
- Exhaust air humidity / fan speed / flap opening
- Surface temperature / product web speed and dwell time
- Grammage / over-feed
- Residual moisture / product web speed
- Stretch and Shrinkage / over-feed
- Product width

The touchscreen of the system displays the measurements. Individually modifiable displays of the measured values facilitate easy monitoring of the complete process by the user.
Various software packages (FULL or BASE) allow adjusting visualization and operating concept to different demands on detectability and user convenience.

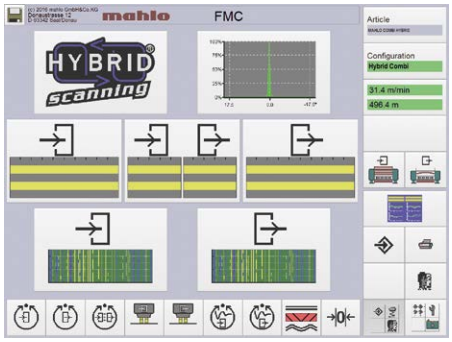

Menu selection of the Orthopac RVMC

TABLE OF CONTENTS

mahlo
trendsetting technology. worldwide.

BASIS

TEXTILE NONWOVEN COATING & CONVERTING PAPER EXTRUSION

ORTHOPAC FMC

BOW AND SKEW DETECTION – SIMPLY UNIQUE

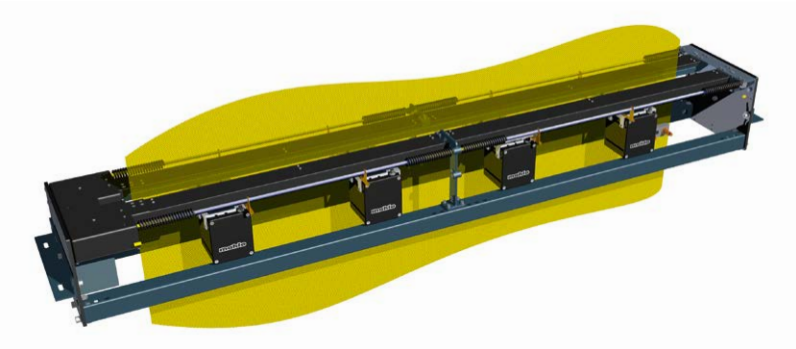

Distortion detection Orthopac FMC: The scanning system is integrated in the straightening system or available as standalone device exclusively for distortion detection.

Area of application

The straightening system Orthopac detects and removes web distortions automatically. The FMC integrated optical distortion detection Orthopac is capable of handling the variety of usual colours, print and Jacquard patterns as well as surface structures such as pile and loop. The scanning system detects and analyses the regular basic structure of the weft threads, courses or rows of tufting. If necessary, their density is determined at the same time.

For the control of various straightening devices, for pull-off rollers, chain differentials and multiple motor drives: The FMC distortion detection Orthopac constitutes the universal automatic straightening system. It can be installed upstream and downstream of a wide variety of production plants. Equipped with digital scanning and state-of-the-art processor technology, it adapts the control automatically to different textiles and displays distortion changes ergonomically and conveniently on the screen.

Product highlights

- ✓ Optimized optics for the greatest possible angle resolution
- ✓ Direct, non-delayed signal processing for fastest determination of angle distortion
- ✓ Optimized transmitted and incident light system
- ✓ Integrated pick or knitted-course count
- ✓ No product-specific adjustment required
- ✓ High-speed scanning
- ✓ Product change detection
- ✓ Integrated recipe management
- ✓ Two-sided scanning possible

Benefits for the customer

- ✓ Broadest scanning spectrum on the market
- ✓ Simple, intuitive operation
- ✓ Automatic scanning even of the most complex product structures
- ✓ No residual distortion
- ✓ Greatest functionality with the smallest physical dimensions

Principle of operation

Web distortion in textiles can be determined in several ways. Distortions alter the regular bright-dark patterns in an illuminated moving fabric. The classical approach is to detect this signal modulation with an optical sensor (modulation principle). Apart from this, camera scanning can be used or both principles of function can be combined.
The scanners of the weft scanner and control Orthopac must record the distortion immediately behind the straightener to be able to detect the result of the control process as quickly as possible.

The industrial PC communicates via the control system with the scanners and roller adjustment mechanism. It can be networked with a host computer and print out distortion logs for quality documentation. Employing Ethernet technology reduces the wiring effort considerably. The Mahlo Service department can be contacted via remote diagnostics software.

The touchscreen of the system displays the measurements. Individually modifiable displays of the measured values facilitate easy monitoring of the complete process by the user.
Various software packages (FULL or BASE) allow adjusting visualization and operating concept to different demands on detectability and user convenience.

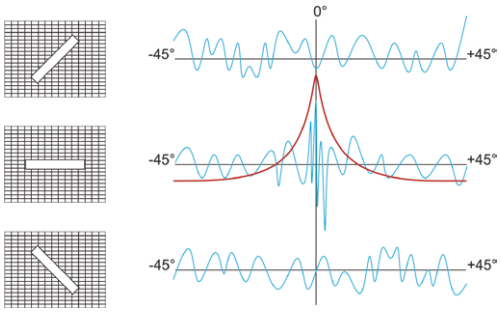

Scanning principle according to the modulation principle via Fast Fourier transformation

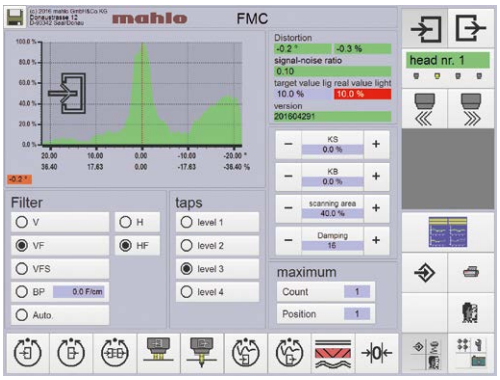

Presentation of the single curve in the operating software

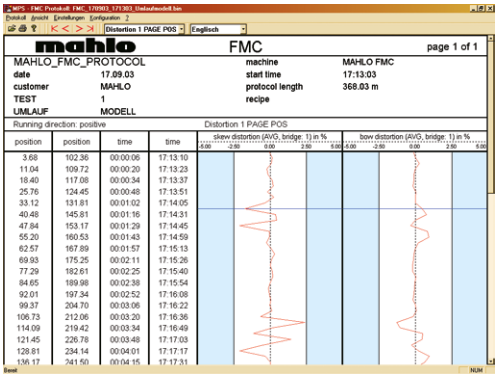

Enhanced Printserver: Protocol view with the viewer

ORTHOPAC FMC

TEXTILE NONWOVEN COATING & CONVERTING PAPER EXTRUSION

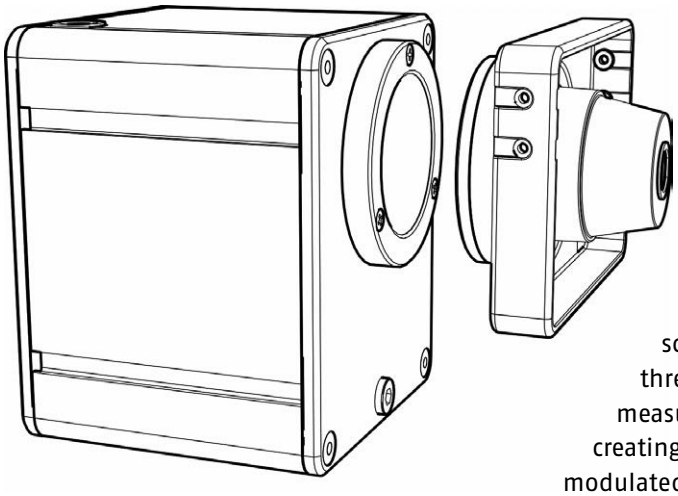

Scanner TK with reflex light (integrated) and transmitted light

Optoelectronic scanning according to the modulation principle (scanner TK)

A number of scanners and lamps are spaced evenly across the product web. The product runs between scanner and lamp. The structure of the passing weft threads and courses modulates the light intensity measured by the scanners. The structures repeat regularly creating bright-dark patterns. These patterns generate a modulated signal in the scanner's receiver system. A centrally-pivoted, cylindrical lens in the scanner oscillates to a specific angle in relation to the desired direction of the weft thread. When the lens is parallel with the weft thread, signal modulation is at its maximum. It then decreases as the oscillating lens progressively cuts across the weft line. Interfering signals not agreeing with the frequency of weft threads, courses or rows of tufting are filtered digitally.

Only signals relevant to distortion are analysed and the web distortion is calculated automatically and precisely from this. By using a lamp with infrared LEDs, the light shining onto each scanner can be controlled automatically and individually. The lamps have a longer working life and consume far less energy; two further attributes of the LED technology.

If textiles barely allow light to shine through them, or their surface texture has distinguishable characteristics, better results can be obtained using reflected light rather than transmitted light.
The scanners are therefore equipped with integrated infrared sided light with automatic intensity control. It can be activated instead of the lamps for transmitted light.

Image scanning (scanners HTK or CTK)

Several high-resolution cameras placed across the product width scan the passing material web. The angle of the weft thread is determined by FFT analysis. Interfering signals not agreeing with the frequency of weft threads, courses or rows of tufting are filtered digitally. Only signals relevant to distortion are analysed and the web distortion is calculated automatically and precisely from this.

Suitable lighting versions (reflex light, transmitted light, power lights) are available also featuring automatic adjustment of the light intensity to different material grades.

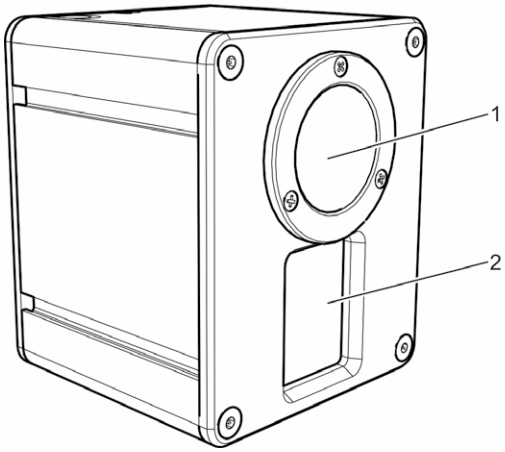

Scanner HTK

1 Lamp (active only with hybrid scanning)
2 Camera

Hybrid scanning

Optoelectronic (TK) and imaging (HTK) measuring principles can be optionally combined into hybrid scanning. Combining two independent processes creates a superior scanning system which utilises existing synergies to an optimal degree.

The two scanning system hereby detect the product passing between the scanners from both sides. The respective more suitable system assumes control of the detected distortions. Mahlo hybrid scanning therefore constitutes the scanning system with the widest dynamic range and greatest scanning spectrum on the market.

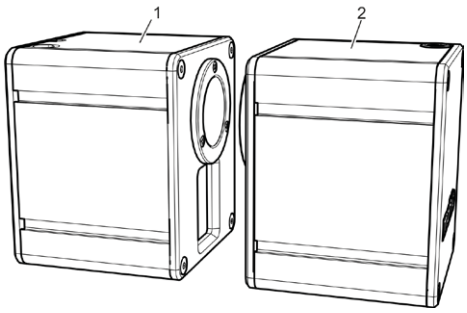

Hybrid scanning with scanner
HTK (1) and TK (2)

Scanners (here with the hybrid system) in action

TEXTILE NONWOVEN COATING & CONVERTING PAPER EXTRUSION

BASIS

VISUALIZATION

EVERYTHING AT A GLANCE

Product highlights

- ✓ Clearly arranged presentation of the distortion characteristic
- ✓ Menu-controlled service settings
- ✓ Two-part combination image for simultaneous monitoring of two scanner units
- ✓ Distortion default as percentage, adjustable (left: skew, right: bow)
- ✓ Direction of product flow and momentary characteristic of the weft
- ✓ Current web distortion as percentage (left: skew, right: bow)
- ✓ Trend diagrams (top: skew, bottom: bow) freely scalable
- ✓ Image scale of histogram, selectable, e.g. -5...0...+5 (top: skew, bottom: bow)
- ✓ Password protection – unauthorised users are prevented from accessing the operating software
- ✓ Recipe management

Customer benefits

- ✓ All key data at a glance
- ✓ Menu guide in all common languages
- ✓ Ergonomic user prompting
- ✓ Simple operation

All entries are made directly on the touchscreen using large, ergonomic buttons. Operation is simple and intuitive. All the key information is visible at a glance.

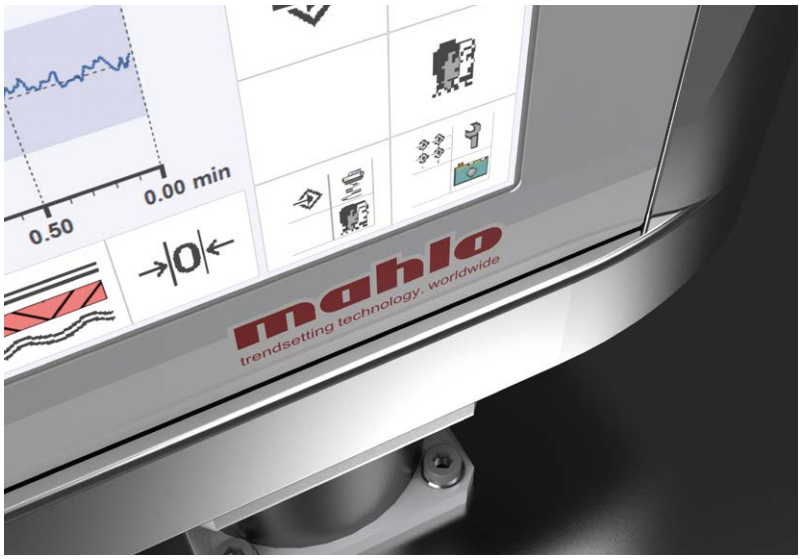

Visualization and operation per touchscreen

Various versions of the operating software are available for individual use:

- The **FMC** full version offers all setting capabilities and options to the entire depth. The full potential of the straightening system can thus be utilized.
- The FMC Base version focuses on the essential functions of the system and offers a compact and simple overview for thecontrol of the processes.

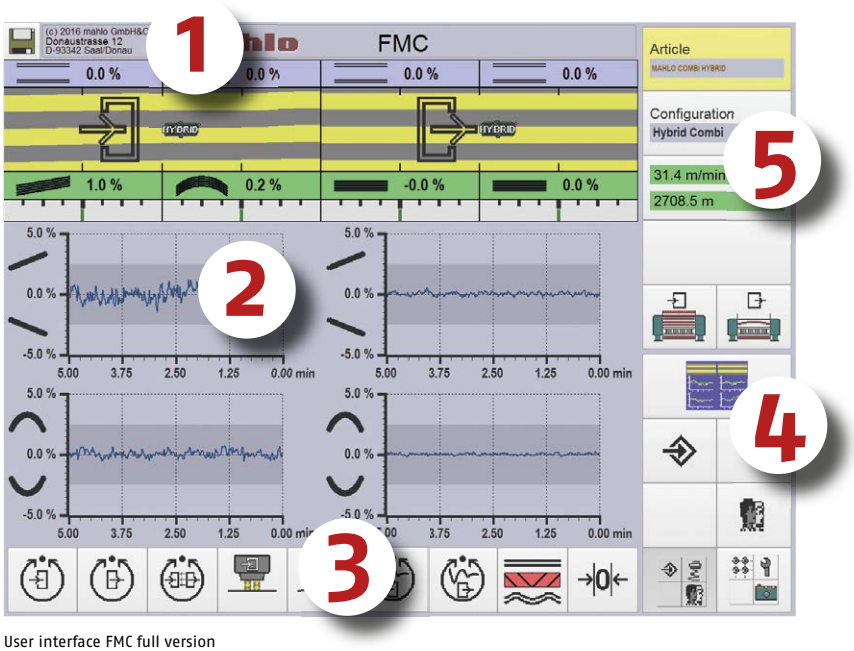

User interface FMC full version

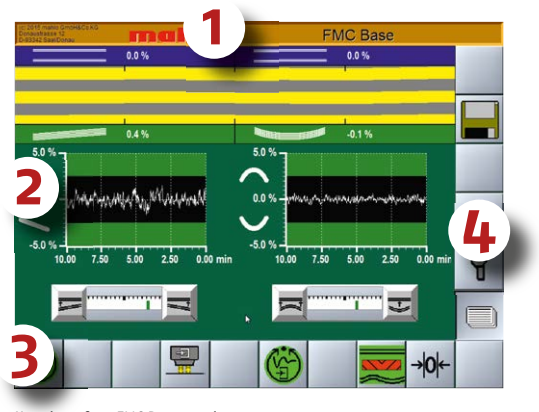

User interface FMC Base version

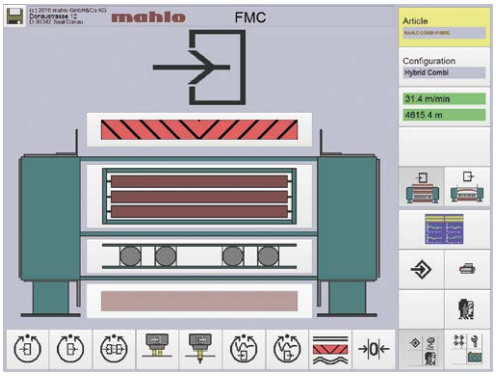

Orthomat simulation with active and inactive elements

The user interface consists of five areas:

1. Title line:
General information (including alarm bar)
2. Display area:
Selectable screen pages (display forms)
3. Horizontal block:
Operating buttons for basic functions and submenu
4. Selection block:
Navigation within the operating software
5. Vertical block:
Operating buttons for the menu selection

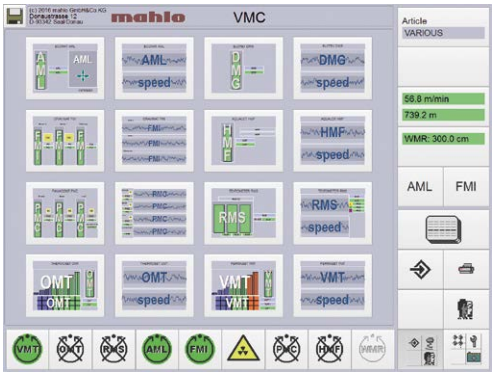

Main page for sensor selection
with integrated process control (option)

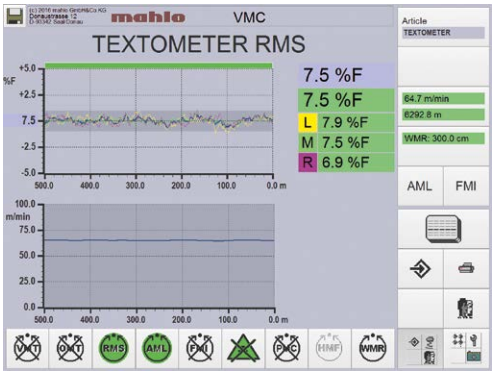

Trend display of residual moisture when featuring integrated process control (example)

VISUALIZATION

MECHANICS

TEXTILE NONWOVEN COATING & CONVERTING PAPER EXTRUSION

ORTHOPAC RVMC

PERFECT INTERPLAY BETWEEN MECHANICS AND ELECTRONICS

Area of application

The Orthopac RVMC is the universally employable straightening system from Mahlo for the correction of web distortions for nearly all applications.

It is precisely designed for the demands of the textile industry and can be adapted to the individual requirement through its modular make-up. The user obtains a sophisticated straightening system with maximum possible customer benefit with respect to versatility and operating convenience.

Through interaction with the suitable scanning system web distortions are corrected exactly and without delay. All this is marked by simple operation of the system and unparalleled rugged construction.

The modular construction allows the system to be configured to meet the demands of changing conditions and requirements. Uses of the straightening system RVMC:

- at the stenter entry
- at the feed end of a levelling stenter
- on detection systems
- before printing systems
- between open width washing machine and drum dryer
- in coating equipment before the coater on the feed end of flame laminating machines
- at the feed end of wide compactors for knits, etc.

Product highlights

- ✓ Highest alignment accuracy
- ✓ Fast-reacting servo-controller
- ✓ Progressive straightening speed
- ✓ Very compact construction
- ✓ Low goods content
- ✓ Numerous options

Customer Benefits

- ✓ Maintaining tight distortion tolerances
- ✓ Documentation of residual distortions
- ✓ Avoiding complaints
- ✓ Improved customer relationship
- ✓ High repeatability
- ✓ Short amortisation times
- ✓ High reliability/Service life

RELIABILITY

Our machines do exactly what we build them for: Hour after hour, year after year. Making sure you will always reach your goal.

Principle of operation

The strength of the Orthopac RVMC is the combination of high straightening accuracy and progressive straightening speed. The compact straightening module is equipped with 3 skew and 2 bow rollers as standard. The product flow concept is optimized for the system to quickly respond to changing web distortions. The stepless positioning drive for the straightening rollers with the unique hydraulic unit combines the shortest positioning times with maximum precision and minimal maintenance. Two independent hydraulic units, each with servomotor and reversing pump with variable speed and rotational direction for the selection of individual cylinders (skew/bow), guarantee maximum efficiency at lowest heat development.

As an alternative, a stepless, electromechanical drive concept for the adjustment of the skew and bow rollers with rapidly responding servo-controller and frequency-controlled electric motors is available.

The analysis electronics with powerful CPU, Ethernet interfaces and power link are integrated in the side panel of the straightening system. The electronics as well as drives in the side panels provide excellent access and little maintenance. The touchscreen for visualization: of the weft thread position and all relevant process parameters is installed either on or in the straightener's side panel or supplied separately with or without enclosure.

The scanners (TK, HTK or hybrid) for the automatic straightening control are integrated at the delivery end of the weft straightener in a so-called scanner bridge. The scanners can be positioned over the width of the product either manually or motorized. Optional edge sensors automatically adjust the sensor position to the product width.

Modern network technology enables short installation times and allows for ease of upgrading. The compact, solid construction of the mechanical straightener is capable of handling highest loads. Possible processing speeds range from 3 m/min to 250 m/min. A variety of options ensures optimum configuration of the system to the respective application and types of product to be straightened.

Orthopac RVMC at the feed end of a calendar system in textile printing

Classic feed-end straightener in textile production

TEXTILE NONWOVEN COATING & CONVERTING PAPER EXTRUSION

ORTHOPAC MFRC

COMPACT AND PRECISE

The special strength of the Orthopac MFRC is the extremely high straightening accuracy at relatively small distortions.

Area of application

Stenter delivery end:
With the MFRC straightener the residual distortions often occurring at the delivery end of the stenter are straightened after the drying processes (bow and skew distortion). This ensures maintaining even the slightest residual distortion tolerances.

Sanforizing equipment:
Product with residual distortion needs to be straightened before sanforizing. If a sanforizer is not equipped with the Orthopac MFRC, the product may have to be run through the stenter a second time. An Orthopac MFRC upstream of the sanforizer can avoid this cost and guarantee a distortion-free product after sanforizing.

Printing machines:
A distortion-free product is one of the most important prerequisites for a print. The straightening process immediately before the printing machine is the last opportunity to correct distortions. With the Orthopac MFRC compromised quality from printing on distorted product is significantly reduced. The cross-slide with photoelectric edge sensing aligns the product path to the print edge.

Flame laminating machines:
In flame laminating the product must be fed to the laminating roller with absolutely no distortion. No corrections are possible after flame laminating. The Orthopac MFRC straightening unit immediately upstream of the laminating roller facilitates reduction of second-quality product by approx. 80%.

Product highlights

- ✓ Very fine metering of the alignment effect
- ✓ Compact dimensions
- ✓ Low product content
- ✓ Fine-tuning of distortion

Customer Benefits

- ✓ Maintaining tight distortion tolerances
- ✓ Documentation of residual distortions
- ✓ Avoiding complaints
- ✓ Improved customer relationship
- ✓ High repeatability
- ✓ Short amortisation times
- ✓ High reliability/Service life

KNOWLEDGE

We have a common goal: Maximum performance for your system. To this end we are by your side from installation to maintenance of the machines to training of your employees. We provide comprehensive training to your staff for operation and maintenance. You will thus be able to solve problems even faster.

Principle of operation

The compact straightening unit is equipped with a skew and bow roller as standard. This arrangement allows for very fine adjustment of the straightening effect while permitting small device dimensions.

The stepless positioning drive for the straightening rollers with the unique hydraulic unit combines the shortest positioning times with maximum precision and minimal maintenance. Two independent hydraulic units, each with servomotor and reversing pump with variable speed and rotational direction for the selection of individual cylinders (skew/bow), guarantee maximum efficiency at lowest heat development.

As an alternative, a stepless, electromechanical drive concept for the adjustment of the skew and bow rollers with rapidly responding servo-controller and frequency-controlled electric motors is available. Scanner, electronics, display and operating station, etc. correspond to the standard design Orthopac RVMC. Processing speeds range from 3 m/min to 250 m/min.

Orthopac MFRC at the delivery end of a stenter

Straightening device Orthopac ahead of the rotary printing machine

MECHANICS

STRAIGHTENING COMBINATIONS

Linking of straightening systems

FOR MAXIMUM DEMANDS

TEXTILE NONWOVEN COATING & CONVERTING PAPER EXTRUSION

Product highlights

- ✓ Combines all the benefits of different straightening units
- ✓ Data management for seamless documentation

Customer Benefits

- ✓ Maintaining tight distortion tolerances
- ✓ Documentation of residual distortions
- ✓ Avoiding complaints
- ✓ Improved customer relationship
- ✓ High repeatability
- ✓ Short amortisation times
- ✓ High reliability/Service life

Area of application

Maximum requirements regarding residual distortions often necessitate very special straightening concepts. Mahlo has responded to this demand and developed individualised solutions. This is necessary since in many cases straightening before the stenter is not sufficient. Web distortions, especially bows, may occur again in the stenter itself.

Scanning after the stenter pull-off roller therefore records the weft thread configuration. Residual distortions are actively controlled via the speed control of the pull-off roller and the Orthopac MFRC straightening unit.

Principle of operation

Because smaller residual distortions are primarily precision-straightened with these applications at the delivery end of the stenter, Orthopac MFRC is especially suitable here. This arrangement allows for very fine and accurate adjustment of the straightening effect while permitting small device dimensions. Since the product only needs to be fed over a single straightening and a bow roller, the system responds reliably to the smallest amounts of distortion, and in this respect offers advantages over a traditional weft straightener.

Mahlo has accommodated the change from standard solutions to customized concepts. Individual consultation by our optimally trained sales personnel combined with the long years of experience in process-technology represent the basis for detecting problems and working out concept solutions.

LISTENING

Our sales team knows how to listen: Gathering the individual requirements, preferences and ideas from our customers, they give the right direction to our product developers. This makes sure you get exactly what you really need.

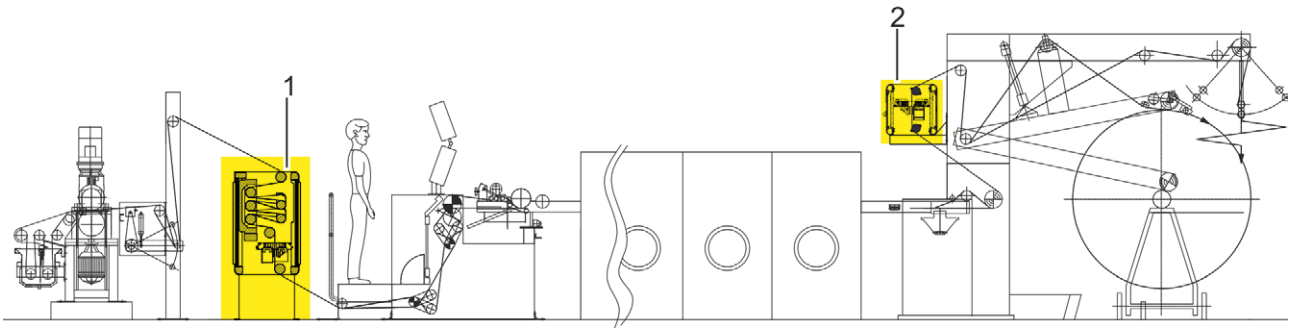

Combination system for wovens: Straightening and process control system Orthopac RVMC (1) in the feed-end of the stenter in combination with a scanning bridge Orthopac FMC (2) in the delivery end

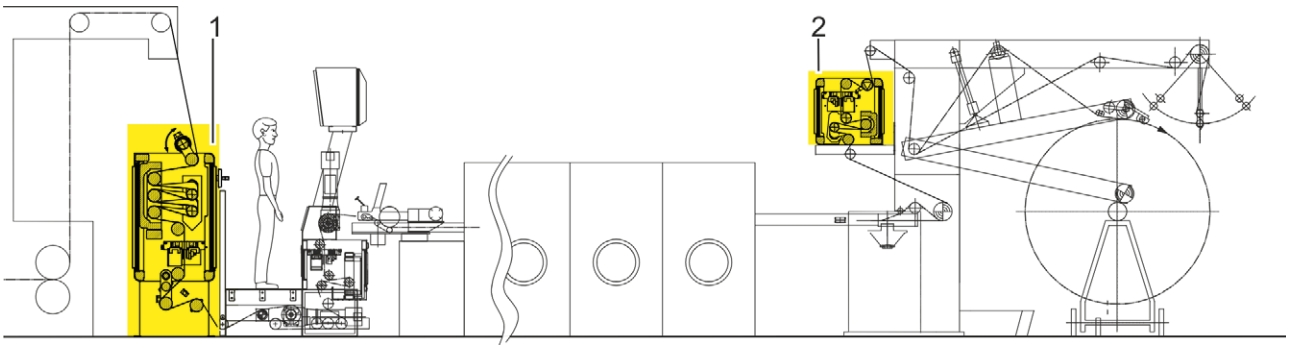

Combination system for knits: Straightening and process control system Orthopac RVMC (1) with web tension control and spreading roller combined with a straightening unit Orthopac MFRC (2) at the stenter delivery end

Quality made
in Germany

For decades we have been developing and producing our machines exclusively in Germany – using highly motivated specialists we have trained ourselves. This is your guarantee of the highest level of quality.

PROCESS CONTROL

TEXTILE NONWOVEN COATING & CONVERTING PAPER EXTRUSION

SENSORS

MEASURING, LOGGING, CONTROLLING

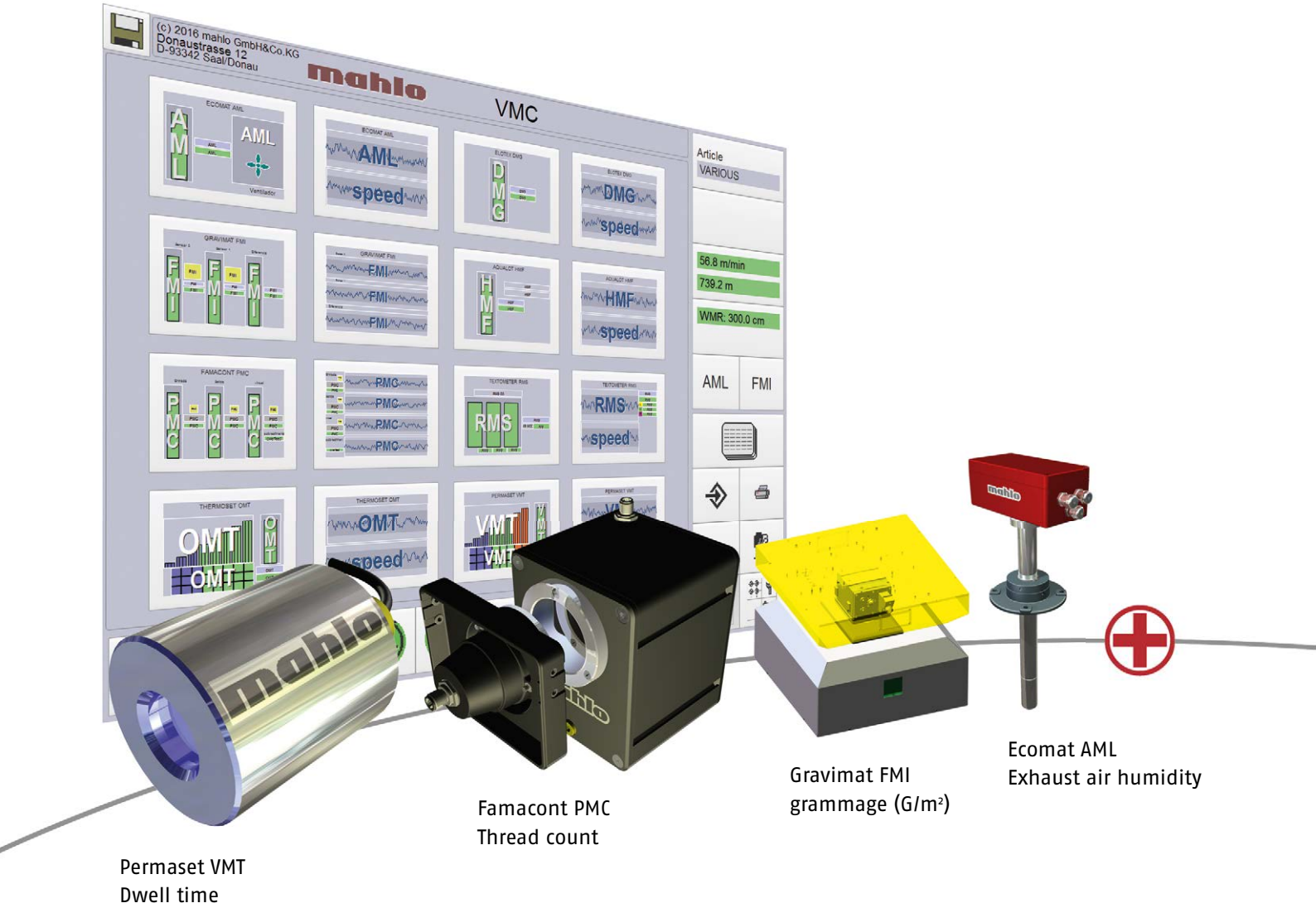

DEVELOPMENT

To ensure high performance capability and maximum customer benefit of our products, we use the newest technologies and strong commitment to develop the products of tomorrow. So that the future can start for you today.

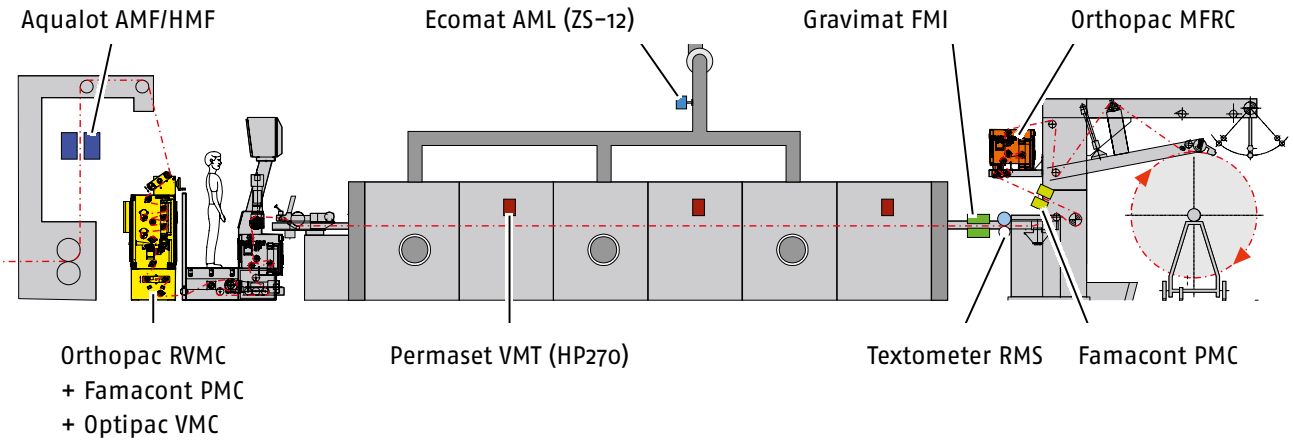

Mahlo straightening and process control system for stenters

Sensor overview

Detailed information can be found in our product brochure „Optipac VMC"

Sensors		Measurand	Control variable
Permaset	VMT	Surface temperature Temperature trend Dwell time	Product web speed
Famacont	PMC	Thread density Course density	Over-feed
Gravimat	FMI	Weight	Over-feed, squeegee, speed
Textometer	RMS	Residual moisture	Product web speed
Ecomat	AML	Exhaust air moisture	Fan speed, flap opening
Wilot	WMR	Web width	–
Aqualot	HMF	High moisture	Compression pressure

SERVICE AND SUPPORT

TEXTILE NONWOVEN COATING & CONVERTING PAPER EXTRUSION

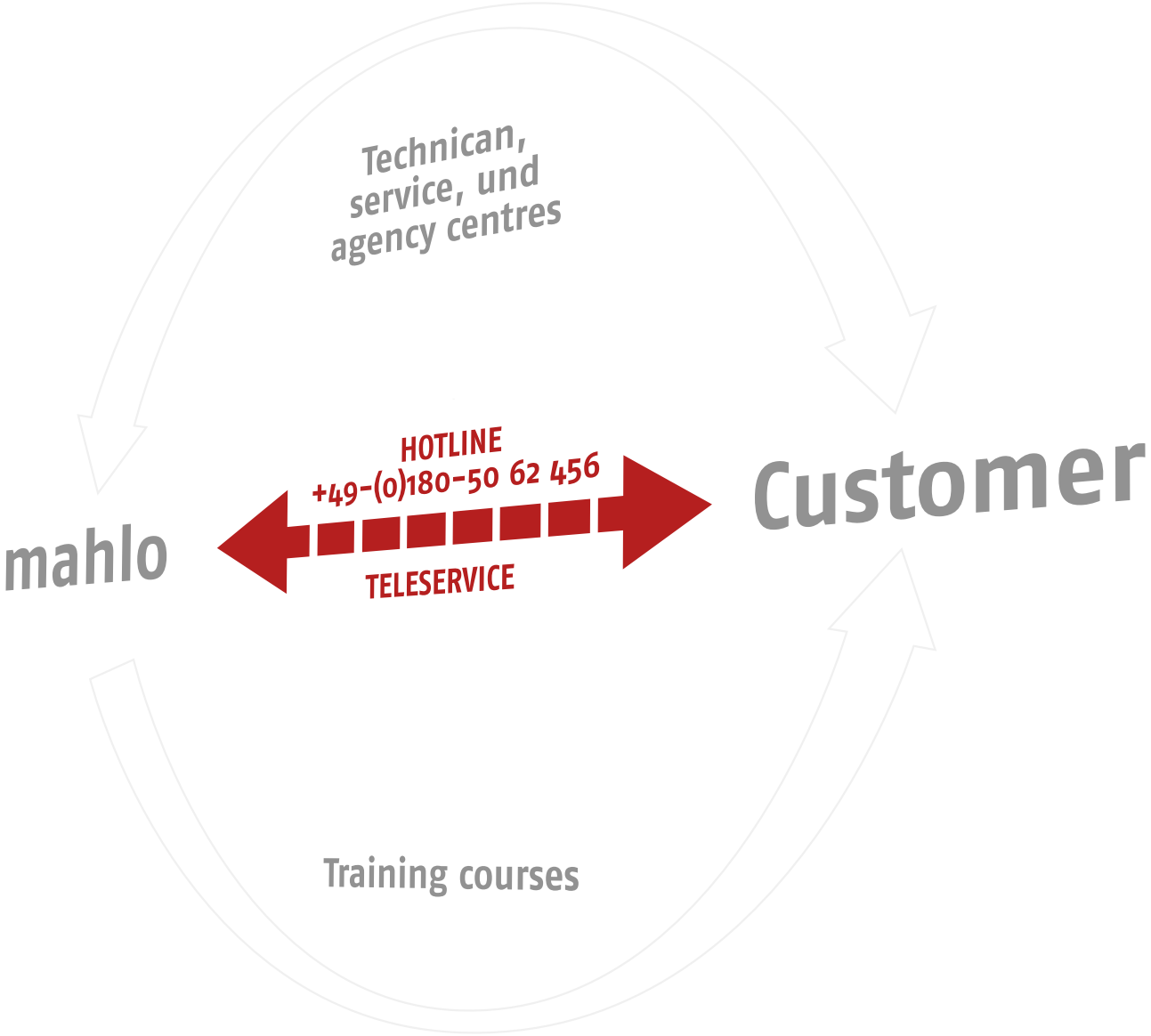

For decades Mahlo® has been setting standards in the field of measuring and control systems for the textile industry: Using innovative and trend-setting technology.

In addition to the technology, direct contact with our customers is especially important to us. This includes intensive assistance and customer care wherever the customer is located and a global service and representative network including 24-hour replacement part service.

Mahlo customers can safely count on the know-how of our experts in any situation, whether installation and startup, conversion of existing systems or maintenance of their machines.

TECHNICAL DATA | ORTHOPAC FMC

Distortion detection	Orthopac FMC
Scanning	Scanners – TK – HTK – Hybrid (TK + HTK) – CTK
Signal generation	Photoelectrical measurement with oscillating lens (2 – 16 scanners) and image projection (2 – 8 scanners) Two-sided scanning, angle resolution: 0.1 ° Detects weft threads (up to 200 threads/cm) and patterns
Optics	Fixed focus (no adjustment required)
Illumination	Infrared LED illumination: Transmitted light, reflex light and flash lighting with automatic intensity adjustment
Signal processing	DSP, microcontroller and IPC in real-time Visualization via IPC and touchscreen
Automatic control	Software controller, PID type, speed-dependent, separate skew and bow component
Display and operation	Touchscreen colour monitor with selectable screen pages; main page: Distortion graphic, histogram and additional numeric distortion display; various service screens
Product speed	0 – 250 m/min
IP protection class of scanners	IP 67 (dust and water spray-protected)
Options	Corrosion protection and cooling

TECHNICAL DATA | ORTHOPAC RVMC

TEXTILE NONWOVEN COATING & CONVERTING PAPER EXTRUSION

Straightening device	Orthopac RVMC
Mechanical straightener	3 skew rollers, 2 bow rollers (optional 3)
Straightening roller adjustment drive	Hydraulic: Selection via servomotor and reversing pump Electrical: Selection via asynchronous motor through frequency converters
Straightening rollers adjustment time	Adjustable bow and skew rollers 0 – 100 %: ≤ 2,5 s
Theoretically max. possible straightening effect (at full utilization of the nominal product width) (at w = 1800mm)	skew ±750 mm bow ±220 mm (2 bow rollers; at 3rd bow roller + 50 %)
Max. nominal product width	3400 mm
Max. product speed	250 m/min (without tension control) 150 m/min (with tension control)
Fabric capacity (basic machine with scanning system)	3 skew / 2 bow rollers: ~ 3280 mm
Scanning system	Scanner bridge with 2 – 12 scanners, optional fully automatic scanner adjustment, motorised (2 – 8 scanners) with edge sensor or manually via high-quality linear guides with engagement points
Dimensions	See diagrams
Weight (when w = 1800 mm)	~ 950 kg
Power connection	3 x 400 VAC ±10 %, 50/60 Hz; transformer station available for special voltages
Max. power consumption	4 kVA
Ambient temperature	5 – 45 °C (without A/C unit) 5 – 50 °C (with A/C unit)
Control and display station	12.1" TFT Touchscreen available as integrated, add-on or separate (with or without enclosure) unit

Dimensions

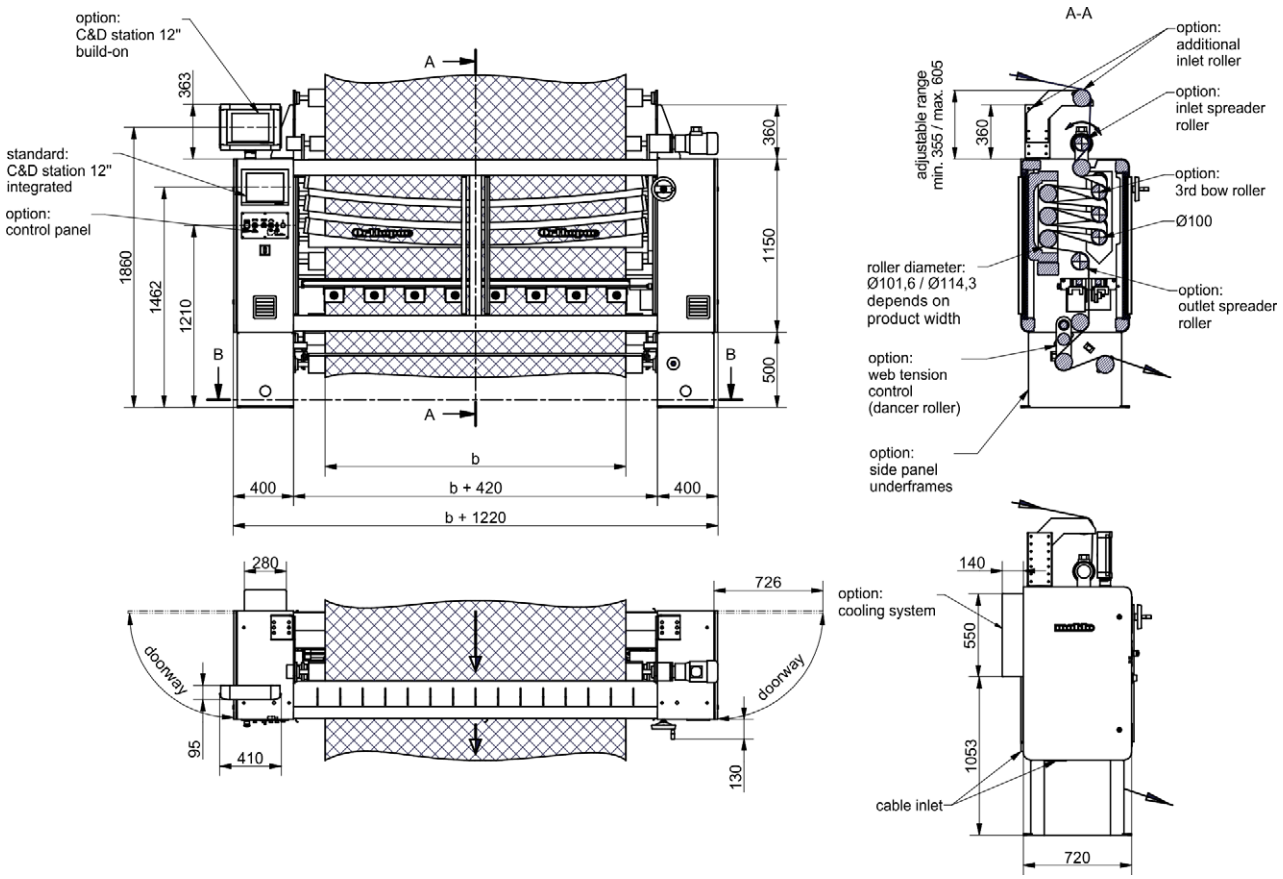

Orthopac RVMC
91-017750

AROUND THE CLOCK

We know every screw and bolt on our machines. Your replacement part will be on its quickest way to you within 24 hours. We put everything in motion to make sure nothing stops you.

Online-Support:
SERVICE@MAHLO.COM

Support-Hotline:
+49-(0)180-50 62 456

TECHNICAL DATA | ORTHOPAC MFRC

TEXTILE NONWOVEN COATING & CONVERTING PAPER EXTRUSION

Straightening device	Orthopac MFRC
Mechanical straightener	1 skew roller, 1 bow roller
Straightening roller adjustment drive	Hydraulic: Selection via servomotor and reversing pump Electrical: Selection via asynchronous motor through frequency converters
Straightening rollers adjustment time	Adjustable bow and skew rollers 0 – 100 %: ≤ 2,5 s
Theoretically max. possible straightening effect (at full utilization of the nominal product width) (at w = 1800mm)	Skew max. ±250 mm Bow max. ±110 mm
Max. nominal product width	3400 mm
Max. product speed	250 m/min (without web tension control) 150 m/min (with web tension control)
Fabric capacity (basic machine with scanning system)	~ 1560 mm
Scanning system	Scanner bridge with 2 – 12 scanners, optional fully automatic scanner adjustment, motorised (2 – 8 scanners) with edge sensor or manually via high-quality linear guides with engagement points
Dimensions	See diagrams
Weight (when w = 1800 mm)	~ 700 kg
Power connection	3 x 400 VAC ±10 %, 50/60 Hz; transformer station available for special voltages
Max. power consumption	4 kVA
Ambient temperature	5 – 45 °C (without A/C unit) 5 – 50 °C (with A/C unit)
Control and display station	12.1" TFT Touchscreen available as separate unit (with or without enclosure)

Dimensions

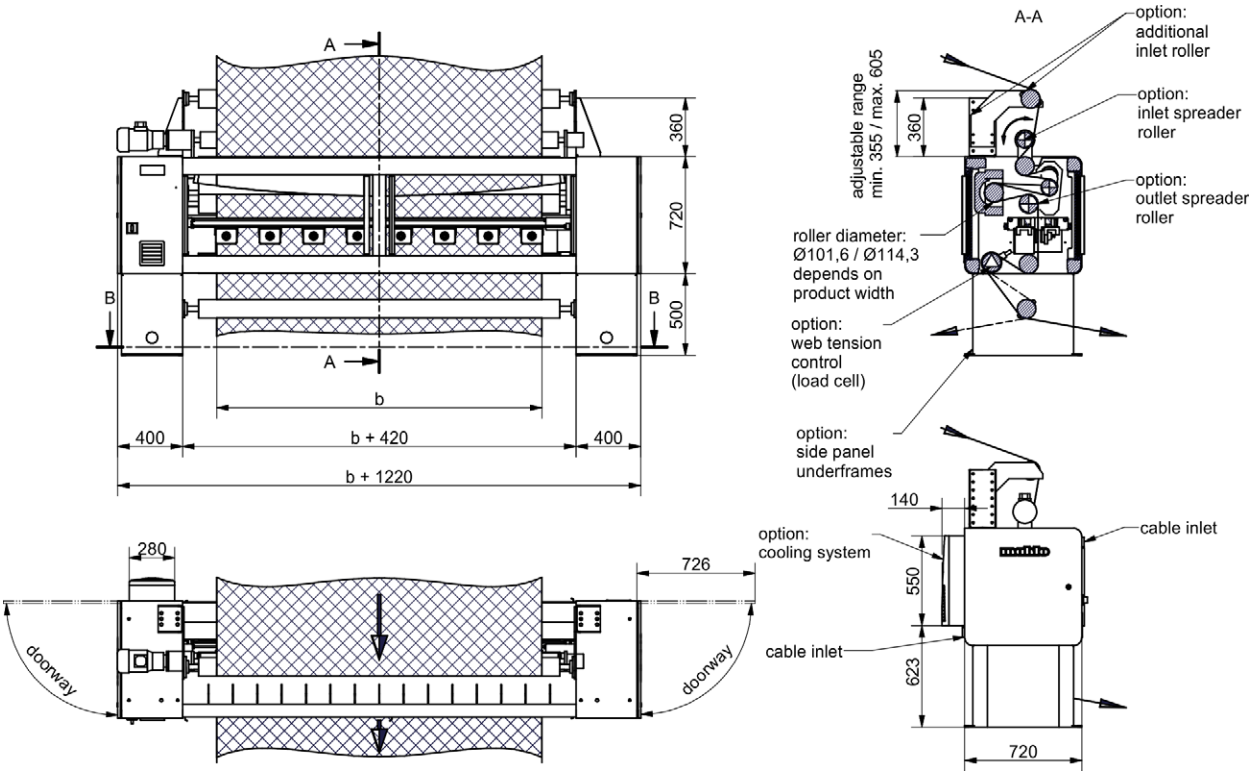

Orthopac MFRC
91-017780

Web running direction from top to bottom

mahlo
trendsetting technology. worldwide.
since 1945

Monitoring and control systems, automation:

MAHLO® GUARANTEES QUALITY. WORLDWIDE, IN YOUR VICINITY.

Best-possible technical support and know-how transfer are written in capital letters at Mahlo. Thanks to an international network of agencies and service centres, customers have at their disposal competent support worldwide. We are there for you 365 days a year, 24 hours a day. Just get in touch with us!

- ✓ Over 40 service centres worldwide
- ✓ Service partners in over 100 countries
- ✓ Direct service and spare parts delivery within 24 hours
- ✓ Remote diagnostic system
- ✓ Service Hotline: +49-180-5062456

Mahlo GmbH + Co. KG Germany
Donaustr. 12, 93342 Saal/Donau
Telephone: +49-9441-601-0
Fax: +49-9441-601-102
Email: info@mahlo.com

Mahlo Italia S.R.L. Italy
Via Fiume 62, 21020 Daverio
Telephone: +39-0332-94-95-58
Fax: +39-0332-94-85-86
Email: mahlo.italia@mahlo.com

Mahlo America Inc. USA
P.O. Box 2825, Spartanburg, S.C. 29304
Telephone: +1-864-576-62-88
Fax: +1-864-576-00-09
Email: mahlo.america@mahlo.com

Mahlo Ouest S.R.L. Belgium
Quartum Center
Hütte 79 - Bte 10
4700 Eupen
Telephone: +32-87-59-69-00
Fax: +32-87-59-69-09
Email: mahlo.ouest@mahlo.com

Mahlo España S.L. Spain
Calle Luxemburgo nº 4
08303 Mataro (Barcelona)
Telephone: +34-938-640-549
Email: mahlo.espana@mahlo.com

WWW.MAHLO.COM

Quality made in Germany

ORTHOPAC® RVMC-15 84-010434-004-en
04/2019 Subject to revision!